SHIMANO

STELLA S A-RB

STL-SW4000XG

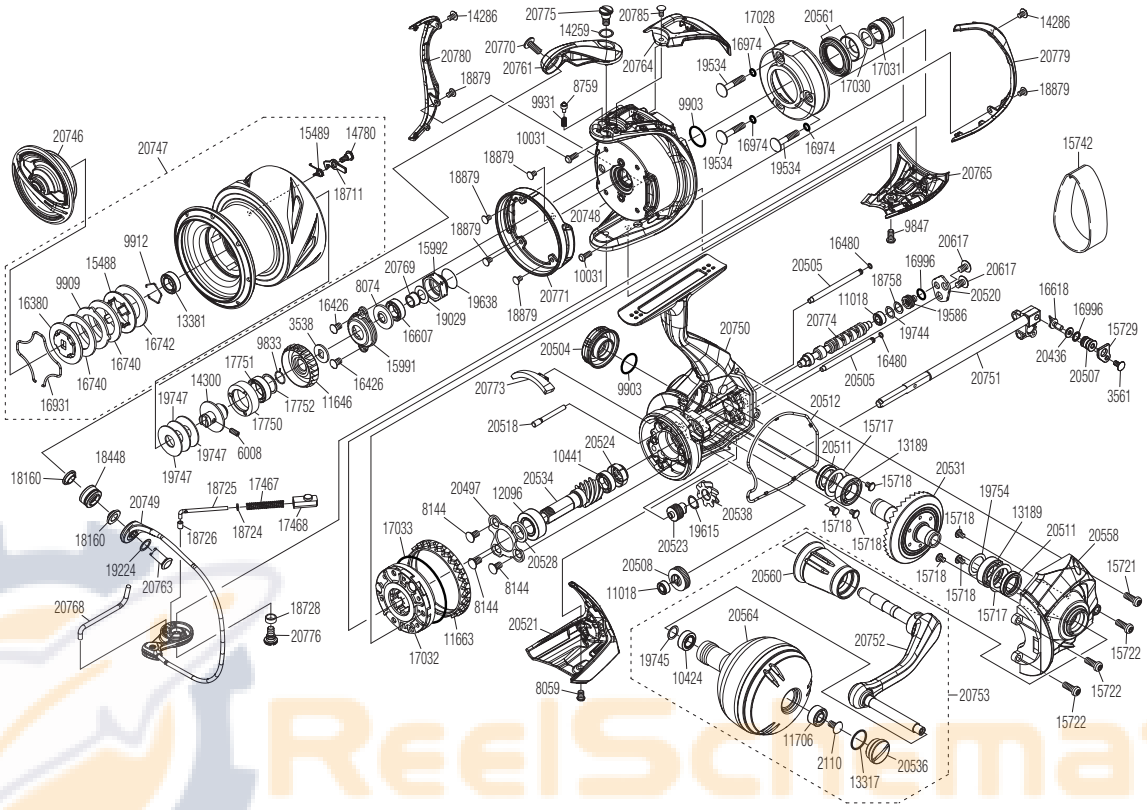
14286
20775
20785
17028
20561
14286
20770
14259
20780
20761
20764
16974
20779
18879
19534
17031
17030
18879
8759
9931
9903
20746
20747
15489
14780
10031
16974
16974
15742
18879
19534
19534
18711
20765
18879
20748
9847
9912
15992
16480
20617
15488
20769
20505
16996
20617
9909
8074
10031
18758
20520
16380
16426
19638
11018
16618
13381
19029
18879
19586
20774
16996
16742
3538
16607
20750
19744
15729
9833
20504
16480
20436
16740
17751
15991
20505
20751
20507
16740
14300
16426
9903
3561
20773
16931
19747
11646
20512
17752
17750
20518
15717
19747
6008
20524
20511
13189
18448
10441
20531
18160
20534
15718
19754
20497
12096
20538
13189
20749
8144
15718
15718
20511
18725
17467
19615
20558
18160
18726
18724
17468
20523
15718
17033
20528
20508
15721
19224
20560
15718
8144
11018
15718
20763
15717
20768
18728
8144
20521
20564
20752
15722
20776
11663
19745
17032
10424
8059
20753
15722
11706
15722
2110
20536
13317

Please note that the number of adjusting washers may not always be the same as shown in the exploded views.
Please note that your actions take full responsibility when you take it apart.

(51SF24H043X)

Part No.	Description	Part No.	Description	Part No.	Description
RD 2110	Screw	RD17028	Clutch Water Proof Cover	RD20560	Handle Shaft Cover Assembly
RD 3538	Spool Support A	RD17030	Washer	RD20561	Roller Clutch Waterproof Assembly
RD 3561	Screw	RD17031	Roller Clutch Inner	RD20564	Handle Knob Assembly
RD 6008	Set Screw	RD17032	Roller Clutch Assembly	RD20617	Screw
RD 8059	Screw	RD17033	Clutch Cover Water Proof	RD20746	Drag Knob Assembly
RD 8074	Bearing Water Proof	RD17467	Bail Spring	RD20747	Spool Assembly
RD 8144	Screw	RD17468	Bail Spring Guide B	RD20748	Rotor Assembly
RD 8759	Click Pin	RD17750	Bearing Housing	RD20749	Bail Assembly
RD 9833	Ratchet Spring	RD17751	Ball Bearing	RD20750	Body Assembly
RD 9847	Screw	RD17752	Washer	RD20751	Main Shaft Assembly
RD 9903	O Ring	RD18160	Collar	RD20752	Handle Shank Assembly
RD 9909	Eared Washer	RD18448	Line Roller Set	RD20753	Handle Assembly
RD 9912	Bearing Retainer	RD18711	Drag Click Screw	RD20761	Bail Arm
RD 9931	Click Spring	RD18724	Spring Guide A Support Collar	RD20763	Line Roller Support
RD10031	Screw	RD18725	Bail Spring Guide A	RD20764	Bail Spring Cover
RD10424	Ball Bearing	RD18726	Spring Guide A Support Collar B	RD20765	Bail Hold Support Guard
RD10441	Ball Bearing	RD18728	Collar	RD20768	Bail Trip Lever
RD11018	Ball Bearing	RD18758	Washer	RD20769	Spacer
RD11646	Drag Click Ratchet	RD18879	Screw	RD20770	Screw
RD11663	Friction Ring	RD19029	Washer	RD20771	Rotor Brim
RD11706	Ball Bearing	RD19224	Washer	RD20773	Bail Trip Strike
RD12096	Ball Bearing	RD19534	Screw	RD20774	Worm Shaft
RD13189	Ball Bearing	RD19586	Bushing	RD20775	Screw
RD13317	O Ring	RD19615	Washer	RD20776	Screw
RD13381	Ball Bearing	RD19638	Nut Water Proof	RD20779	Rotor Guard A
RD14259	Washer	RD19744	Washer	RD20780	Rotor Guard B
RD14286	Screw	RD19745	Washer	RD20785	Screw
RD14300	Bearing Bushing	RD19747	Spool Washer A		
RD14780	Screw	RD19754	Washer		
RD15488	Key Washer A	RD20436	Washer		
RD15489	Drag Click Spring	RD20497	Bearing Retainer		
RD15717	Washer	RD20504	Handle Screw Cap		
RD15718	Screw	RD20505	Oscillating Guide		
RD15721	Screw	RD20507	Collar		
RD15722	Screw	RD20508	Idle Gear		
RD15729	Oscillating Pawl Cover	RD20511	Bearing Water Proof		
RD15991	Retainer	RD20512	Body Seal		
RD15992	Rotor Nut	RD20518	Idle Gear Shaft		
RD16380	Key Washer B	RD20520	Worm Shaft Retainer		
RD16426	Screw	RD20521	Rear Protector		
RD16480	O Ring	RD20523	Idle Gear (Small)		
RD16607	Ball Bearing	RD20524	Bushing		
RD16618	Oscillating Pawl	RD20528	Washer		
RD16740	Drag Washer A	RD20531	Drive Gear Assembly		
RD16742	Drag Washer B	RD20534	Pinion Gear		
RD16931	Retainer	RD20536	Handle Knob Seal		
RD16974	O Ring	RD20538	Idle Gear (Large)		
RD16996	O Ring	RD20558	Side Cover Assembly	RD15742	Belt (S) (accessory)